DRAWING No.	SHT.		THIRD ANGLE PROJECTION		DO NOT SCALE	Q.A.		H/S SETT	
152226	1 OF 1 SHTS.	© THE COPYRIGHT OF THIS DRAWING IS RESERVED BY HELLERMANN TYTON. IT IS ISSUED ON CONDITION THAT IT IS NOT COPIED, REPRODUCED OR DISCLOSED TO A THIRD PARTY EITHER WHOLLY OR IN PART WITHOUT THE CONSENT IN WRITING OF HELLERMANN TYTON.		BS 8888	IF IN DOUBT ASK	H/S Q.A.		REL. INSP.	
						H/S PROD		EXT.ISS.CODE	2/7

STANDARD PART (AFTER UNRESTRICTED RECOVERY)

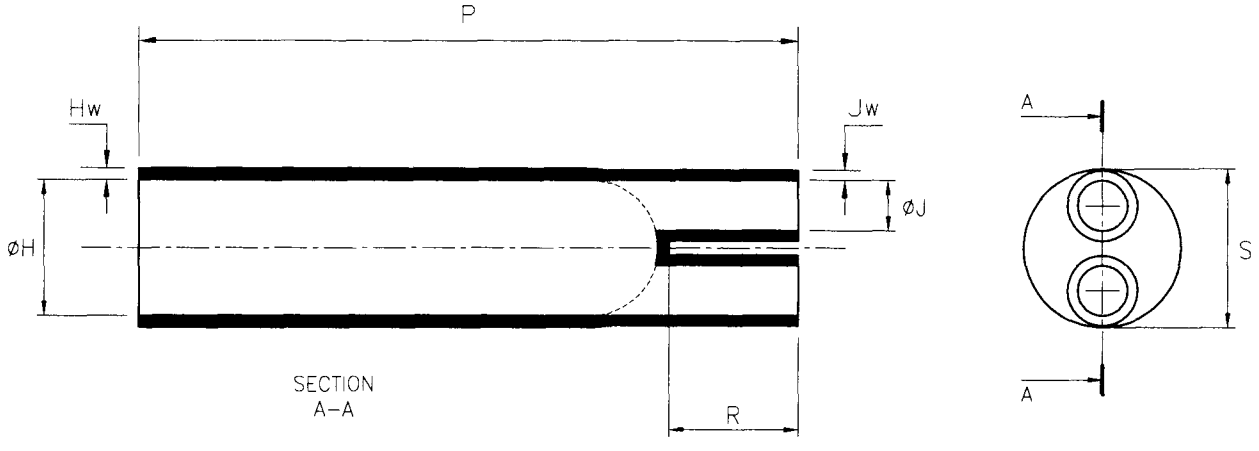

EXPANDED (AS SUPPLIED)

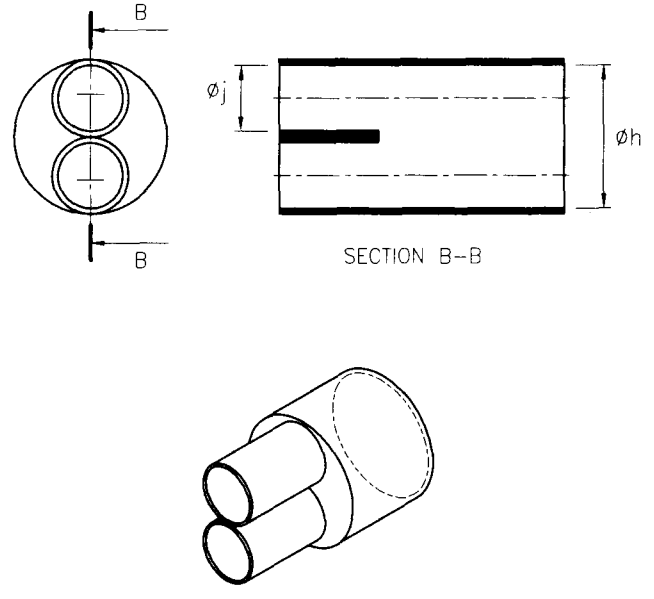

UNCONTROLLED COPY 25 JUL 2011

3M PART No.	NAVSEA PART No.	PART No.	EXPANDED DIAMETERS (AS SUPPLIED)		RECOVERED DIAMETERS		RECOVERED DIMENSIONS				
			øh	øj	øH	øJ	P	R	S	Hw	Jw
			MIN	MIN	MAX	MAX	±10%	NOM	NOM	±20%	±20%
HDBB 210A	1A62–2	217–2	31.0 (1.22)	13.0 (0.51)	15.2 (0.60)	4.3 (0.17)	99.5 (3.92)	28.5 (1.12)	–	2.2 (0.09)	2.2 (0.09)

ISSUE	NOTE No.	DRAWN	DATE
2	P1352	GB	18/07/11
1	P1325	GB	23/09/10

HellermannTyton

Pennycross Close, Plymouth, Devon, England PL2 3NX
Tel ++44 (0) 1752 701261 Fax ++44 (0) 1752 790058

NAME	G Baser	SCALE	NTS	ADHESIVE	A3 ORIGINAL SHEET SIZE 420mm x 297mm	SHT. 1 OF 1 SHTS.
DATE	23/09/10	DIMS IN	mm (in)			
TITLE	TWO WAY OUTLET SLEEVE			PART No. 217	DRAWING No. 152226	