STRIPPING DETAIL

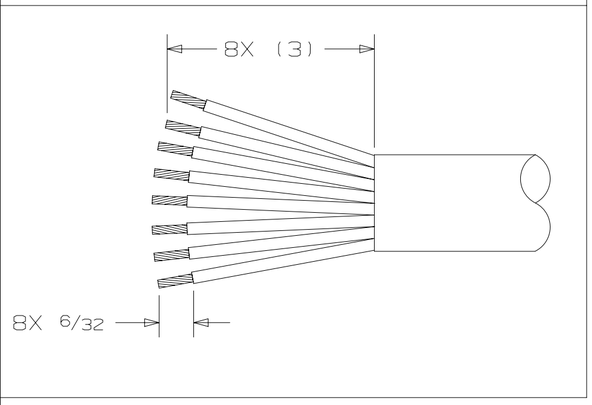

PURCHASED NUMBER	PART WEIGHT (LB)	PACKAGE	WIDTH (IN)	DEPTH (IN)	HEIGHT (IN)	QTY.	CASES PER PALLET	C.O.O.	LOT DATA
4650	0.46	CASE	24.000	12.000	7.000	40	16	CN	N

**For weight tolerance see Engineering Spec. 15ES5001.
***For Metric Conversions contact Truck-Lite Engineering.

STRIPPING DETAIL

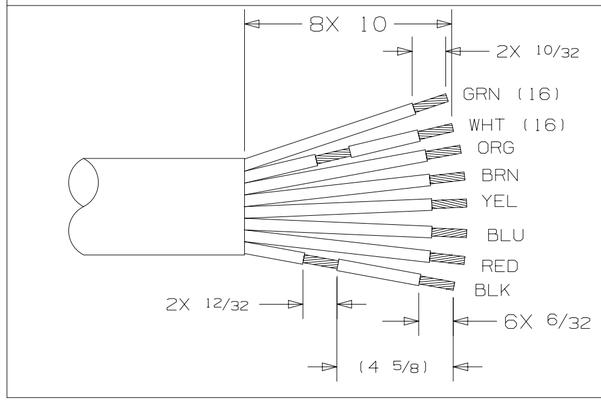

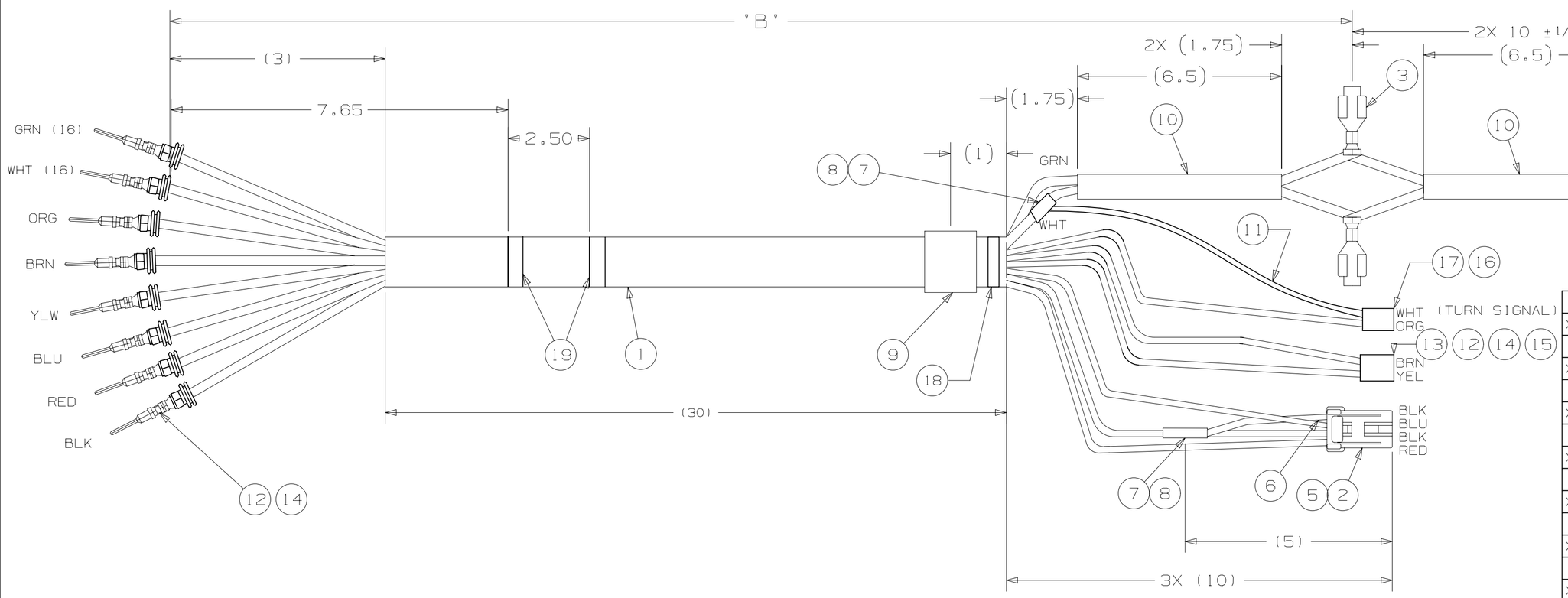

REV	DATE	DESCRIPTION	ECN	DWN	APVD
6	10-7-16	ADDED ITEM 19 IN TWO PLACES	40161A	JJP	*GRJ
X7	10-7-16	RELEASE FOR PPAP	40161A	JJP	*GRJ
5	5-13-16	UPDATED IMAGE OF WIRES TO CONN 174966	40161A	JJP	*GRJ
X6	5-13-16	RELEASE FOR PPAP	40161A	JJP	*GRJ
4	1-15-16	ADDED ITEM 18 TO THE BOM	40161A	JJP	*GRJ
X5	1-15-16	RELEASE FOR PPAP	40161A	JJP	*GRJ
3	11-6-15	REMOVED CONNECTOR, LOCK, AND SEAL FROM PART	40161A	JJP	*GRJ
X4	11-6-15	RELEASE FOR PPAP	40161A	JJP	*GRJ
2	10-16-15	REVERSED THE BLUE AND BLACK WIRE LOCATIONS ON CONN 174966	40161A	JJP	*GRJ
X3	10-16-15	RELEASE FOR PPAP	40161A	JJP	*GRJ
1	10-9-15	CHANGED QTY OF ITEM 12 TO 10, ADDED ITEM 20 FOR EMPTY PORTS	40161A	JJP	*GRJ
X2	10-9-15	RELEASE FOR PPAP	40161A	JJP	*GRJ
0	10-7-15	RELEASE	40161A	JJP	*GRJ
X1	10-7-15	RELEASE FOR PPAP	40161A	JJP	*GRJ
E	8-20-15	CHANGED TERMINAL PART NUMBER ON ITEM 2, 12048074 WAS 15304731, REMOVED P/N'S 11 & 12, CHANGED ITEM 15 QTY TO 10, UPDATED TO NEW MFG P/N	40161A	JJP	*GRJ
D	6-29-15	ADDED LOCK AND SEAL PE P/N'S	40161A	JJP	*GRJ
C	6-9-15	ADDED CONNECTOR PINOUT TABLES	40161A	JJP	*GRJ
B	6-2-15	UPDATED BOM	40161A	JJP	*GRJ
A	5-11-15	PRELIMINARY	40161A	JJP	*GRJ

REVISION HISTORY

ITEM	DESCRIPTION	REQ.
19	TAPE-YELLOW, VINYL	A/R
18	CABLE TIE, BLACK	1
17	CONN- MOLEX 03-06-1023	1
16	TERM-MOLEX 02-06-1101	2
15	LOCK-PE 12052634	1
14	SEAL-PE 15324973	10
13	CONN-PE 12052641	1
12	TERM-PE 12048074	10
11	WIRE-18 GA GXL WHT, 10"	1
10	BLACK HEAT SHRINK	2
9	ID TAG (PART NO., DWG REV. NO.)	1
8	HEAT SHRINK W/ ADHESIVE	2
7	MECHANICAL SPLICE W/ SOLDER	2
6	WIRE-18 GA GXL BLK	1
5	CONN-AMP #174966	1
4	WIRE-16 GA GXL BLK	2
3	TERM-AMP, #63896-1 (OR EQUIVALENT)	4
2	TERM-AMP, #776181-1 (OR EQUIVALENT)	4
1	8 COND CABLE,2-16GA GXL,6-18GA GXL	"B"

NOTES:
1. 2-16GA GXL, 6-18GA GXL PER SAE J1128 UNLESS NOTED OTHERWISE.
2. ALL TERMINALS MUST PASS A 25 POUND PULL TEST.
   SPLICES USING 16GA WIRE MUST PASS A 27 POUND PULL TEST.
   SPLICES USING 18GA WIRE MUST PASS A 25 POUND PULL TEST.
3. MINIMAL SOLDER SPLASH ACCEPTABLE ON WIRE INSULATION.

CONN 174966 PINOUTS			
1	2	3	4
BLACK	BLUE	BLACK	RED

CONN 03-06-1023 PINOUTS	
1	2
ORANGE	WHITE

CONN 12052641 PINOUTS	
A	B
YELLOW	BROWN

THIS DRAWING CONTAINS CONFIDENTIAL PROPRIETARY INFORMATION OWNED BY TRUCK-LITE CO., LLC AND IS SUBJECT TO RETURN UPON REQUEST. THE FURNISHING OF THIS DRAWING IS NOT TO BE CONSTRUED AS THE GRANT OF ANY LICENSE, EITHER EXPRESSED OR IMPLIED, TO MANUFACTURE, HAVE MANUFACTURED, USE OR SELL THE STRUCTURES SHOWN HEREON.

REFERENCE DRW. NO.: -
CUST./SUPPLIER PART NO.: -
THIRD ANGLE PROJECTION
CAD DATA SOURCE: UNIGRAPHICS
DIMENSIONS ARE: INCHES
TOLERANCES:
DECIMALS: 2 PLS: ±.01
3 PLS: ±.005
ANGULAR: ±1°

TRUCK-LITE CO., LLC
FALCONER, NEW YORK USA

CHARTED	43
PART NO.	"B"

HARNESS-NAV PEDESTAL MIR

SCALE:	MOLD/TOOL NO.:	PART NO.:	DRW. NO.:
NTS	-	4650	67498C6