STRIPPING DETAIL

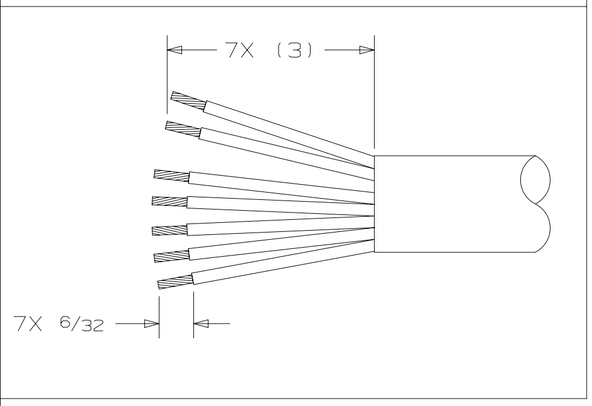

PURCHASED NUMBER	PART WEIGHT (LB)	PACKAGE	WIDTH (IN)	DEPTH (IN)	HEIGHT (IN)	QTY.	CASES PER PALLET	C.O.O.	LOT DATA
5917	0.46	CASE	24.000	12.000	7.000	40	16	CN	N

**For weight tolerance see Engineering Spec. 15ES5001.
***For Metric Conversions contact Truck-Lite Engineering.

STRIPPING DETAIL

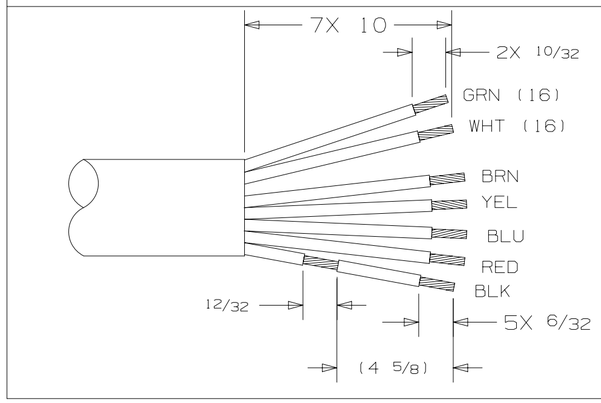

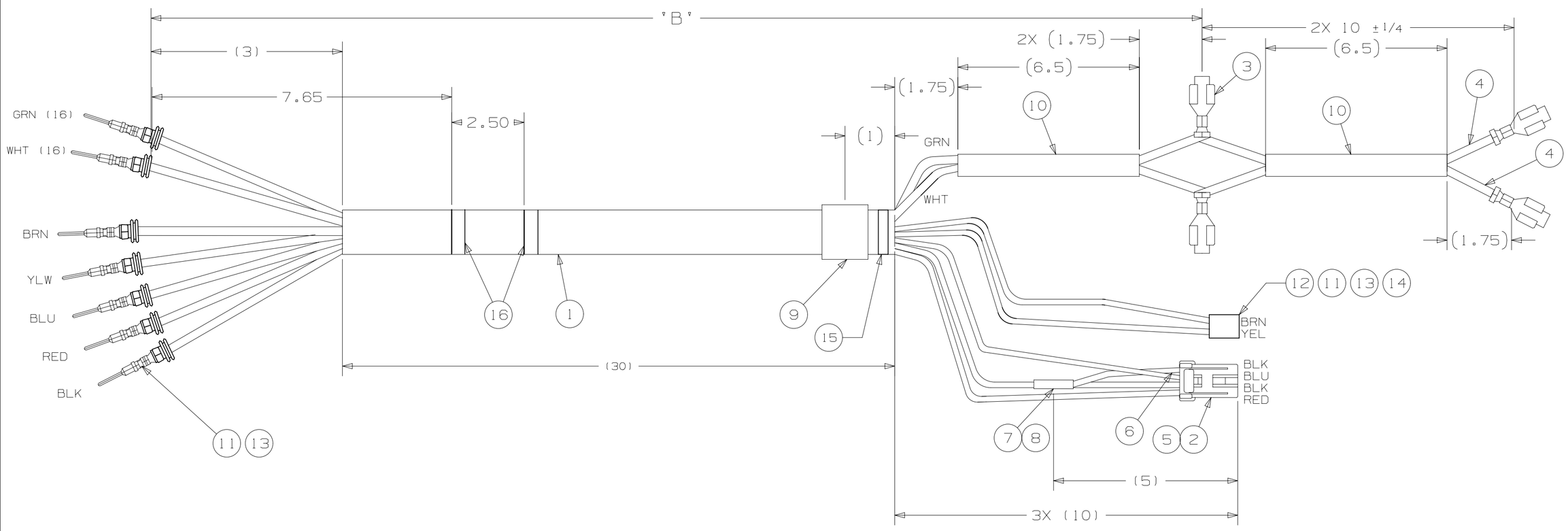

NOTES:
1. 2-16GA GXL, 5-18GA GXL PER SAE J1128 UNLESS NOTED OTHERWISE.
2. ALL TERMINALS MUST PASS A 25 POUND PULL TEST.
   SPLICES USING 16GA WIRE MUST PASS A 27 POUND PULL TEST.
   SPLICES USING 18GA WIRE MUST PASS A 25 POUND PULL TEST.
3. MINIMAL SOLDER SPLASH ACCEPTABLE ON WIRE INSULATION.

ITEM	DESCRIPTION	REQ.
16	TAPE-YELLOW, VINYL	A/R
15	CABLE TIE, BLACK	1
14	LOCK-PE 12052634	1
13	SEAL-PE 15324973	9
12	CONN-PE 12052641	1
11	TERM-PE 12048074	9
10	BLACK HEAT SHRINK	2
9	ID TAG (PART NO., DWG REV. NO.)	1
8	HEAT SHRINK W/ ADHESIVE	1
7	MECHANICAL SPLICE W/ SOLDER	1
6	WIRE-18 GA GXL BLK	1
5	CONN-AMP #174966	1
4	WIRE-16 GA GXL BLK	2
3	TERM-AMP, #63896-1 (OR EQUIVALENT)	4
2	TERM-AMP, #776181-1 (OR EQUIVALENT)	4
1	7 COND CABLE,2-16GA GXL,5-18GA GXL	"B"

CONN 174966 PINOUTS			
1	2	3	4
BLACK	BLUE	BLACK	RED

CONN 12052641 PINOUTS	
A	B
YELLOW	BROWN

REV	DATE	DESCRIPTION	ECN	DWN	APVD
O	9-13-17	RELEASE	40161C	JJP	*JJP
X1	9-13-17	RELEASE FOR PPAP	40161C	JJP	*JJP
A	12-19-16	PRELIMINARY	40161A	JJP	*GRJ

REVISION HISTORY

THIS DRAWING CONTAINS CONFIDENTIAL PROPRIETARY INFORMATION OWNED BY TRUCK-LITE CO., LLC AND IS SUBJECT TO RETURN UPON REQUEST. THE FURNISHING OF THIS DRAWING IS NOT TO BE CONSTRUED AS THE GRANT OF ANY LICENSE, EITHER EXPRESSED OR IMPLIED, TO MANUFACTURE, HAVE MANUFACTURED, USE OR SELL THE STRUCTURES SHOWN HEREON.

REFERENCE DRW. NO.: -

CUST./SUPPLIER PART NO.: -

THIRD ANGLE PROJECTION

CAD DATA SOURCE: UNIGRAPHICS

DIMENSIONS ARE: INCHES

TOLERANCES:
DECIMALS: 2 PLS: ±.01
3 PLS: ±.005
ANGULAR: ±1°

TRUCK-LITE CO., LLC
FALCONER, NEW YORK USA

CHARTED	43
PART NO.	"B"

HARN-NAV PED,LH, NO TURN SIG

SCALE:	MOLD/TOOL NO.:	PART NO.:	DRW. NO.:
NTS	-	5917	71386C0