PART NO.	AWG/STR/PLT	O.D.	VOLTAGE RATING	COLOR	COMPOUND NO.
WUT1018-0	18 (16/30) TPC	.123	10 KVDC	BLACK	0WC40
WUT1018-1	18 (16/30) TPC	.123	10 KVDC	BROWN	1WC40
WUT1018-2	18 (16/30) TPC	.123	10 KVDC	RED	2WC40
WUT1018-3	18 (16/30) TPC	.123	10 KVDC	ORANGE	3WC40
WUT1018-4	18 (16/30) TPC	.123	10 KVDC	YELLOW	4WC40
WUT1018-5	18 (16/30) TPC	.123	10 KVDC	GREEN	5WC40
WUT1018-6	18 (16/30) TPC	.123	10 KVDC	BLUE	6WC40
WUT1018-7	18 (16/30) TPC	.123	10 KVDC	VIOLET	7WC40
WUT1018-8	18 (16/30) TPC	.123	10 KVDC	GRAY	8WC40
WUT1018-9	18 (16/30) TPC	.123	10 KVDC	WHITE	9WC40
WUT1018-10	18 (16/30) TPC	.123	10 KVDC	NATURAL	10WC40

ZONE	LTR	DESCRIPTIONS	DATE	APPROVED

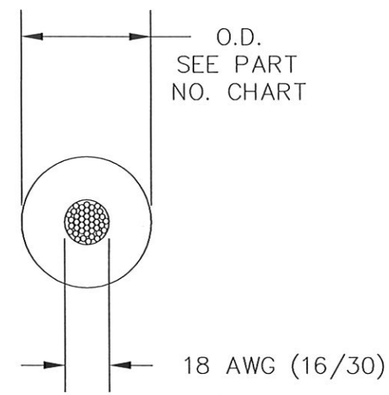

NOTES (UNLESS OTHERWISE SPECIFIED):

1. OPERATING CONDITIONS:
   VOLTAGE – SEE PART NO. CHART
   MAXIMUM CURRENT – 11 AMPERES
   ALTITUDE – SEA LEVEL TO 70,000 FT.
   TEMPERATURE – –65°C TO +150°C (200°C INTERMITTENT)
2. MATERIALS AND FINISHES:
   CONDUCTOR – COPPER STRANDING IN ACCORDANCE WITH ASTM B140-85, TIN PLATED I.A.W. ASTM B33
   INSULATION – SILICONE RUBBER IN ACCORDANCE WITH PROPRIETARY SPECIFICATION.
3. VOLTAGE RATINGS ARE CONTINUOUS DC RATINGS.
4. CURRENT RATINGS ARE BASED ON SINGLE CONDUCTOR IN FREE AIR.
5. WIRE MADE IN ACCORDANCE WITH U.L. 3239.

NO. REQ'D.	PART NO.	DESCRIPTION	DET. NO.
		BILL OF MATERIAL	

UNLESS OTHERWISE SPECIFIED DIMENSIONS ARE IN INCHES 63
TOLERANCES ARE:
FRACTIONS ± DECIMALS .XX ± .XXX ± .005 ANGLES ± 1°

CONTRACT NO.

WIREMAX 705 Wamba Ave. Toledo, OH. 43607

APPROVALS		DATE
DRAWN	NAN	11-3-11
CHECKED		11-4-11

TITLE
18 AWG H.V. WIRE
SILICONE INSULATED

MATERIAL
SEE NOTE 2

FINISH
SEE NOTE 2

NEXT ASSY	USED ON

APPLICATION

DO NOT SCALE DRAWING

UNLESS OTHERWISE SPECIFIED ALL DIMENSIONS SHOWN ARE BEFORE PLATE DIMENSIONS

SIZE	CODE IDENT NO	DRAWING NO.
B	Ø6RA5	WUT1018-XX

SCALE 4X SHEET 1 OF 1

ORIGINAL