60802070984

ECO	REV	DESCRIPTION	DATE	AUTH

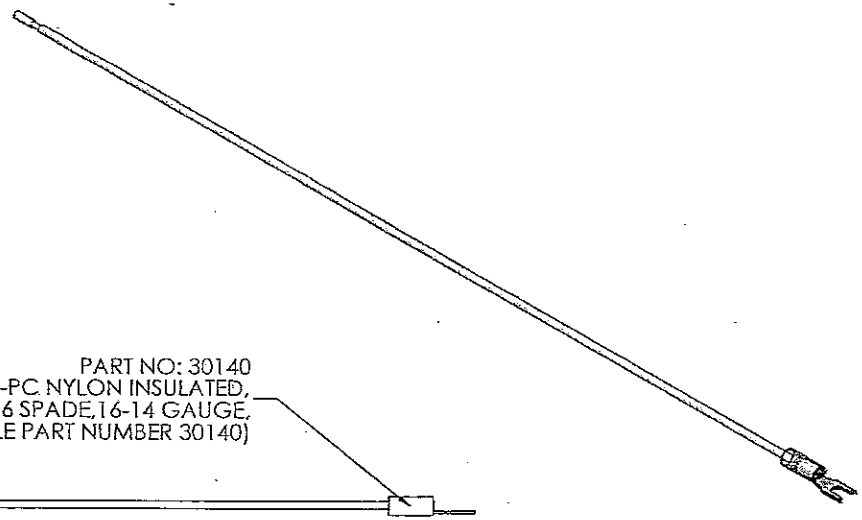

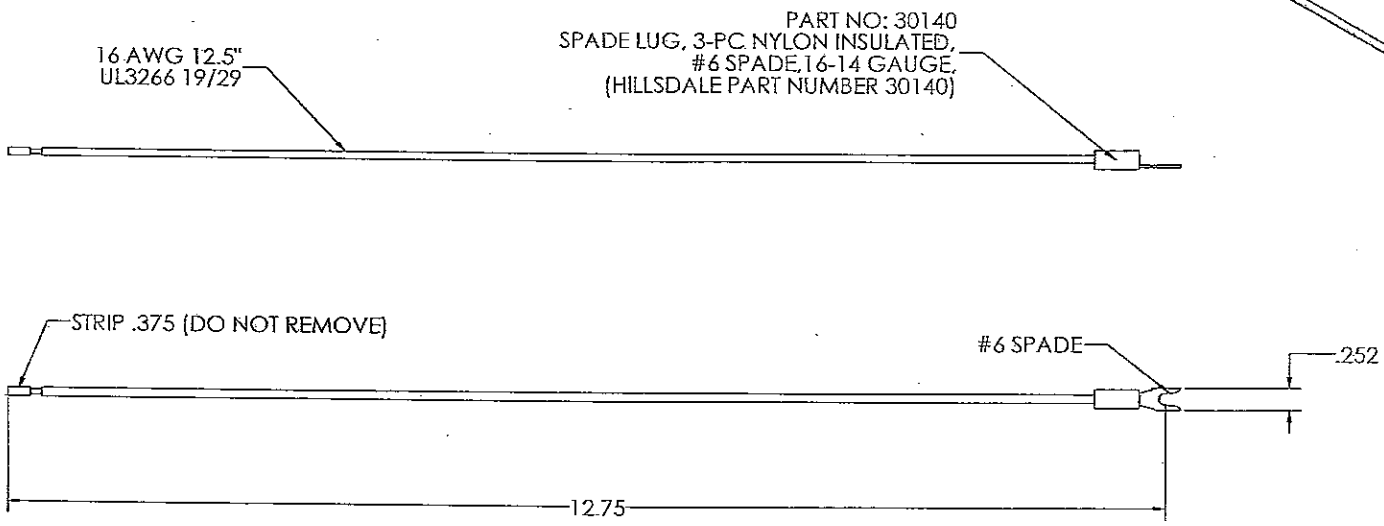

PROPRIETARY AND CONFIDENTIAL
THE INFORMATION CONTAINED IN THIS DRAWING IS THE SOLE PROPERTY OF SPACE AGE ELECTRONICS INC. ANY REPRODUCTION IN PART OR AS A WHOLE WITHOUT THE WRITTEN PERMISSION OF SPACE AGE ELECTRONICS INC IS PROHIBITED.

PROJECT:	EP03279
SCALE:	1:1
SIZE/GWNLE:	ENG
PART NO:	ND0112
PROGRAM NO.:	
NEXT ASSY:	
APPLICATION	

UNLESS OTHERWISE SPECIFIED:
DIMENSIONS ARE IN INCHES
TOLERANCES:
FRACTIONAL ± 1/32"
ANGULAR: MACH ± 0.5 BEND ± 0.5
TWO PLACE DECIMAL ±.031
THREE PLACE DECIMAL ±.015
INTERPRET GEOMETRIC TOLERANCING PER:
MATERIAL: UL3266 19/29
FINISH: BLACK
DO NOT SCALE DRAWING

	NAME	DATE
DRAWN	MWP	3/24/2024
CHECKED		
ENG APPR.		
MFG APPR.		
Q.A.		

COMMENTS:

SPACE AGE ELECTRONICS, INC.

TITLE: CAS3 WIRE 16 AWG WHITE 12.5" STRIP.375/#6SPADE UL3266 19/29

SIZE	DWG. NO.	REV
C	MD30147	1

SCALE: 1:1 WEIGHT: SHEET 1 OF 1