Product Specification

Part No.:B1430-610

Cross Section

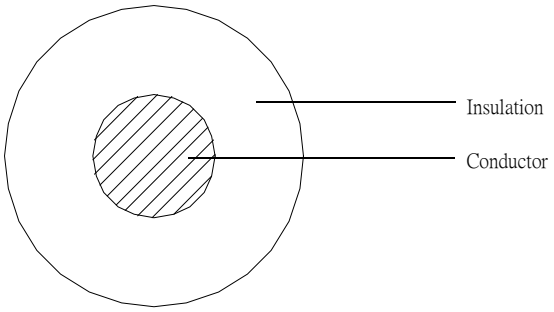

Marking

BELDEN E357312-S 28AWG AWM STYLE 1430 105C
300V VW-1 - - - c AWM I A/B 105C 300V FT1 -F- ROHS

Description

Rated Voltage (V)	300
Rated Temperature (°C)	105
Product Standard Certification	UL
Flammability Test	UL VW-1 & CSA FT1

Application

For internal wiring of appliances

Reference Standard

UL758, UL1581 & CSA C22.2 No.210.2

Construction

1Core

Conductor	**Stranded Tinned Copper**
AWG	28
Construction	7/0.127
Stranded Dia. (mm)	0.38
Insulation	**XL-PVC**
Min.. Thickness (mm)	0.34
Nom. Thickness (mm)	0.41
Insulation Dia. (±0.08mm)	1.20

Color

Insulation

Per request

Performance

Electrical Characteristics:

Max. Conductor DC Resistance at 20°C (ohm/km)	223.8

Mechanical Characteristics:

Test Object		**Insulation**
Test Material		PVC
Before Aging	Tensile Strength (Mpa)	>=10.3
	Elongation (%)	>=100
Aging Condition		136±2°C X 168 hrs
After Aging	Tensile Strength (Mpa)	>=70% of original
	Elongation (%)	>=65% of original

Sample Record

Sample No. :

Original spec no.: Rev.:

Ref. spec No. : SK-B1430-610 Rev.: 0

Revision History

Prepared by:	Yaqin Mo	2012/11/12	Table No.:T100	Rev.: 0
Approved by:	CICICHENG	2012/11/12		Page 1 of 1

333 Yanhu Road, Huaqiao Town, Kunshan City, Jiangsu Province, P. R. China 215332
Tel : (86) 512 5796 1688 Fax : (86) 512 5796 1222
Email : oemsales.apac@belden.com Website : www.belden.com, www.beldenapac.com

Be certain. Belden.