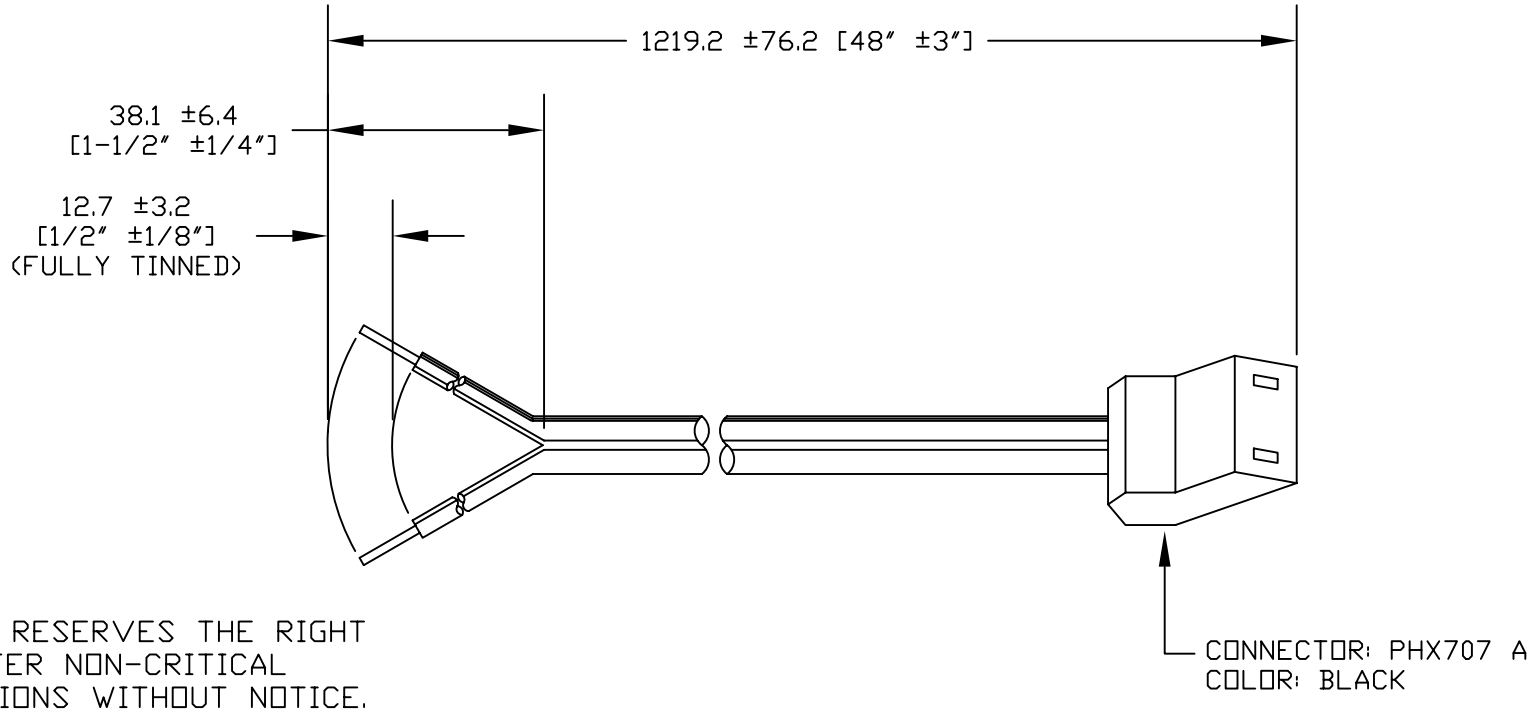

VOLEX RESERVES THE RIGHT TO ALTER NON-CRITICAL DIMENSIONS WITHOUT NOTICE.

NOTES:
1) CORDAGE: 18/2 SPT-1, 105°C, BLACK
2) APPROVALS: UL/CSA WIRING HARNESS.
3) RATING: 1 AMP/250 VOLTS
4) FLAME RATING : VW1
5) CORDAGE DIMENSIONS: .110" X .220" REF.
6) CORD IS NOT POLARIZED. RIBBED LEAD WILL NOT ALWAYS BE IN SAME POSITION WITH REFERENCE TO THE CONNECTOR.
7) PACKAGING: 100 PIECES PER CARTON.
8) ALL DIMENSIONS IN MILLIMETERS UNLESS OTHERWISE NOTED.

REV	DESCRIPTION	DATE
1	C.U.D - NEW RELEASE	9/25/07

Volex
CUD
FORM IN71-07 REV.A

- ☒ Indianapolis, IN
- ☐ Conover, N.C.
- ☐ Freemont, CA
- ☐ Aguascalientes, MX
- ☐ Tijuana, Mexico
- ☐ Hermosillo, MX
- ☐ Clinton, AR
- ☐ Kanata, Canada

Proprietary Notice:

This document is the property of Volex Incorporated. The information contained herein is not to be disclosed to anyone without the express written consent of Volex Inc.

MATERIAL:
PLUG: PVC, BLACK
JACKET: PVC, BLACK

FINISH:

SCALE: NOT TO SCALE
ECO: N/A

TOLERANCE UNLESS OTHERWISE SPECIFIED
.XXX ± .005
.XX ± .02
.X ± .03
FRACT. ± 1/32
ANGULAR ± 1/2°

ITEM DESCRIPTION: APLIANCE CORD FOR COOLING FAN

APPROVED	DRAWN BY	DATE:
STC	STC	9/25/07

PART NO. 17904 10 B1