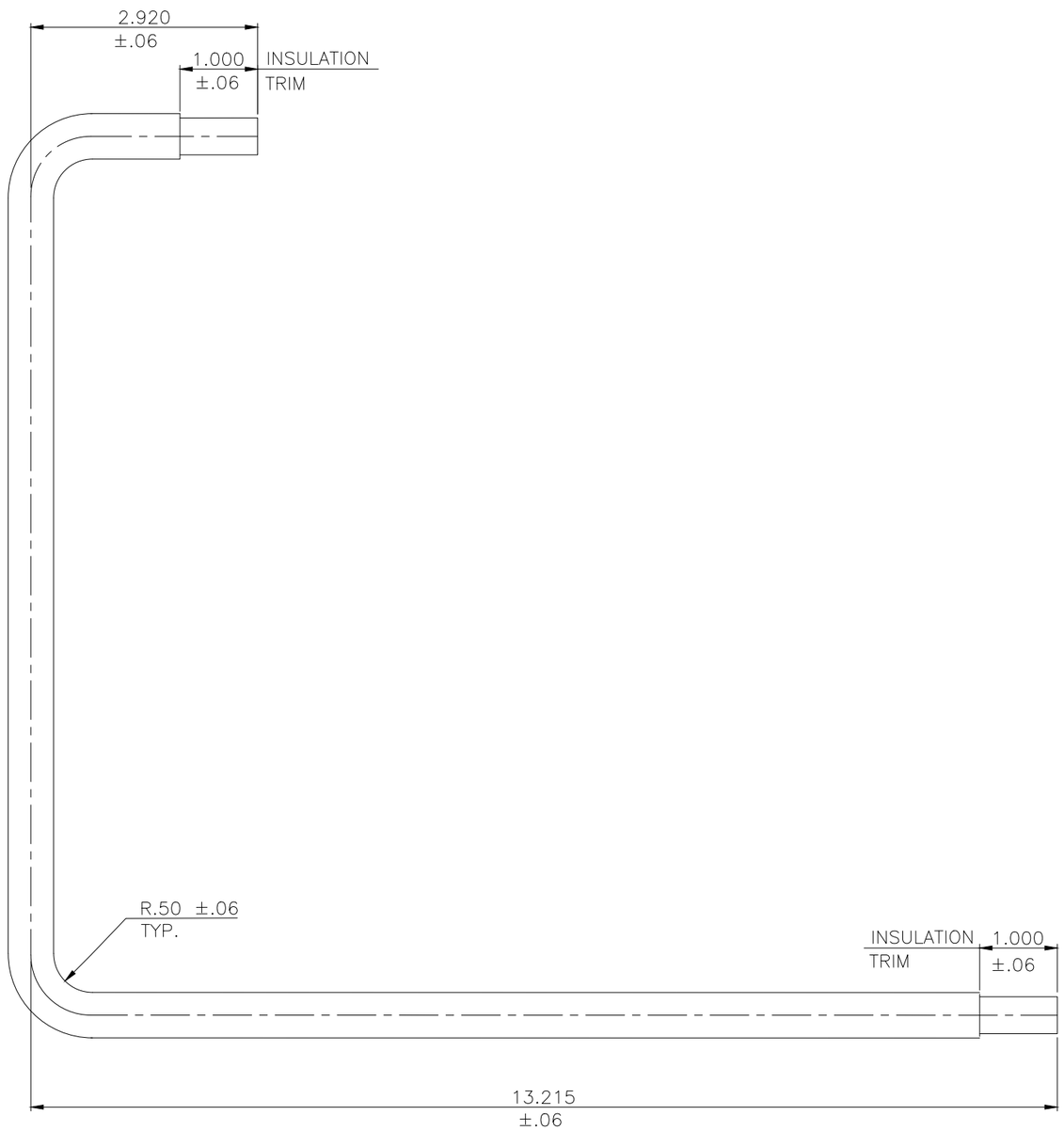

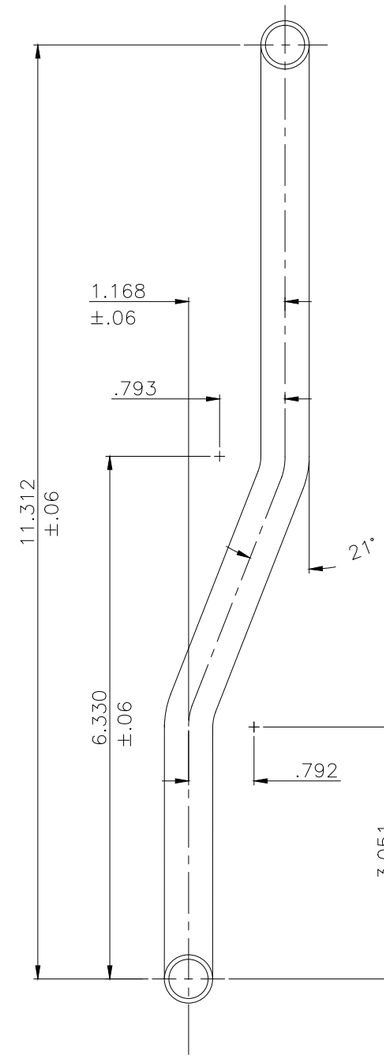

NOTES:
1. UNLESS OTHERWISE SPECIFIED:
   TOLERANCES ARE ±.060
   INSIDE RADII ARE .500 ±.060
2. MATERIAL SPECIFICATION:
   4/0 AWG XHHW-2 ALUMINUM WIRE (BLACK)
   UL LISTED 90 DEGREE C RATING
   18 STRANDS
3. ON NON-CRITICAL FORMED AREAS WHERE DIMENSIONAL TOLERANCE ACCURACY MAY NOT BE CONSISTENTLY ACHIEVABLE DUE TO MATERIAL CHARACTERISTICS, EATON MAY ALLOW ACCEPTABLE WIRE FIT AND FUNCTION TO DETERMINE WIRE ACCEPTABILITY.
4. PROCESSED WIRE, FILE #E476999.

SIMILAR TO: 25-27755

UNLESS OTHERWISE SPECIFIED DIMENSIONS IN INCHES X.X ±0.1 X.XX ±0.02 X.XXX ±0.005 X° ±1 X.X° ±.5	DRAFTER/DESIGNER: ERICK TEJADA — DATE (YYYY/MM/DD): 2021/04/28 ENGINEERING APPROVED: JIM GEHLBACH — MANUFACTURING: AL CABLE REVISION DESCRIPTION: ECO # 0206340 —ADDED NOTE 3 & 4.	EATON CORPORATION - CONFIDENTIAL AND PROPRIETARY NOTICE TO PERSONS RECEIVING THIS DOCUMENT AND/OR TECHNICAL INFORMATION: THIS DOCUMENT, INCLUDING THE DRAWING AND INFORMATION CONTAINED THEREON, IS CONFIDENTIAL AND IS THE EXCLUSIVE PROPERTY OF EATON CORPORATION, AND IS MERELY ON LOAN AND SUBJECT TO RECALL BY EATON AT ANY TIME. BY TAKING POSSESSION OF THIS DOCUMENT, THE RECIPIENT ACKNOWLEDGES AND AGREES THAT THIS DOCUMENT CANNOT BE USED IN ANY MANNER ADVERSE TO THE INTERESTS OF EATON AND THAT NO PORTION OF THIS DOCUMENT MAY BE COPIED OR OTHERWISE REPRODUCED WITHOUT THE PRIOR WRITTEN CONSENT OF EATON. IN THE CASE OF CONFLICTING CONTRACTUAL PROVISIONS, THIS NOTICE SHALL GOVERN THE STATUS OF THIS DOCUMENT. © 2013 Eaton Corporation. All Rights Reserved
DRAWING IN ACCORDANCE WITH: ASME Y14.5M-1994		TITLE: METER BREAKER WIRE
X.XXX±0.01 SYMBOLS PER ASB.1143		SIZE: D — DRAWING NUMBER: 25-29431 — REVISION: 2
ENG/MFG REFERENCE		CHANGE RESPONSIBILITY: LINCOLN-ENGINEERING
		EATON — CLASS CODE: NA — SCALE: 1.25 : 1 — SHEET: 1 OF 1

DSD_DFM_ACAD_IN.DWG REV 2