Product Specification

BELDEN
SENDING ALL THE RIGHT SIGNALS®

Part No.:XB1015838

Style 1015 Insulated Wire.

Cross Section

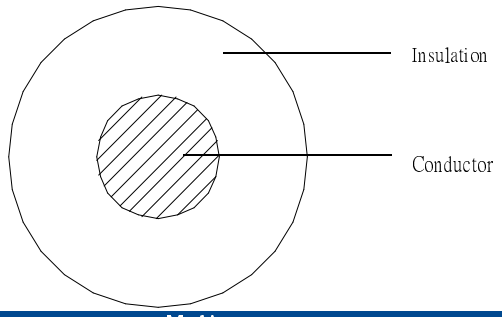

Marking

BELDEN E357312-S 6AWG AWM STYLE 1015 105C 600V
VW-1 - - - c AWM I A/B 105C 600V FT1 ROHS

Description

Rated Voltage (V)		600
Rated Temperature (℃)		105
	Fixed	-40~105
Product Standard Certification		UL & JQA
Flammability Test		UL VW-1 & CSA FT1

Application

Internal Wiring of Appliances

Reference Standard

UL758, UL1581 & CSA C22.2 No.210.2

Construction

1Core

Conductor	**Stranded Tinned Copper**
AWG	6
Construction	7/38/0.254
Stranded Dia. (mm)	5.40
Insulation	**PVC(UV)**
Min.. Thickness (mm)	1.16
Nom. Thickness (mm)	1.65
Insulation Dia. (±0.3mm)	8.70

Color

Insulation

Available colors from:
Black / Brown / Red /Pink/ Orange / Yellow / Green /Light Green/
Blue /Light Blue/ Violet/Gray / White

Performance

Electrical Characteristics:

Max. Conductor DC Resistance at 20℃ (Ω/km)	1.340

Mechanical Characteristics:

Test Object		**Insulation**
Test Material		PVC
Before Aging	Tensile Strength (Mpa)	≧10.3
	Elongation (%)	≧100
Aging Condition		136±2℃ x 168 hrs
After Aging	Tensile Strength (Mpa)	≧70% of original
	Elongation (%)	≧65% of original

Sample Record

Sample No. :
Original spec no.: Rev.:
Ref. spec No. : SK-B1015-838 Rev.: 0

Revision History

Prepared by:	XIAOYU.ZHU	2012/11/19	Table No.:T100	Rev.: 0
Approved by:	CICI.CHENG	2012/11/19		Page 1 of 1

333 Yanhu Road, Huaqiao Town, Kunshan City, Jiangsu Province, P. R. China 215332
Tel : (86) 512 5796 1688 Fax : (86) 512 5796 1222

Be certain.