NORTHWIRE INC.	DESC: 222 ITC/PLTC/CM/AWM 2517 105C 300V		DWG NO: FITC222–010
	SCALE: 8x	DATE: 09/16/10	DR. BY: C MORTON
	CUSTOMER: FRANKLIN ELECTRIC		CUSTOMER P/N: FITC222–010

NWI P/N: FITC222–010

This document contains proprietary and confidential information of Northwire, Inc. (and its subsidiary) and shall not be used, disclosed or reproduced, in whole or in part, for any purpose without the prior written consent of Northwire, Inc. (and its subsidiary).

FRANKLIN ELECTRIC HAS AUTHORIZED SALE TO; CABLE CONCEPTS, AND LUTAMAR (OK TO QUOTE)
CONTACT WARREN PRILL @ 1–765–677–6905 TO AUTORIZE OTHER REQUESTS.

ITEM	SPECS.
A.	22 GAUGE 7x.0296TC CONCENTRIC O.D. .023±.001"
B.	9 MILS GR-PVC INSULATION PER UL AWM 10002 7 MILS MIN. SEMI-RIGID PVC INSULATION O.D. .050±.002"
C.	TISSUE PAPER SEPARATOR
D.	25 MILS PRESSURED PVC JACKET 20 MILS MIN. PVC JACKET BLACK JACKET UL AND CSA RECOGNIZED

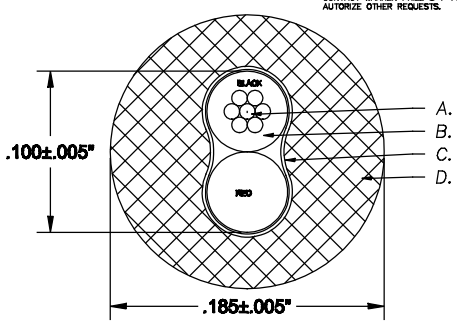

ELECTRICAL REQUIREMENTS:
NONE SPECIFIED

MECHANICAL REQUIREMENTS:
NONE SPECIFIED

CORE DIMENSIONS FOR INTERNAL USE ONLY

LEGEND; SUN ITC/22 AWG22 105C E162801 SUNLIGHT RESISTANT OR PLTC 105C OR AWM 105C 300V
OR CMX-OUTDOOR-CMG LL64185 105C OR CSA AWM I/II A/B 105C 300V FT4

REVISION RECORD	REV	REV DATE	APR 1	APR 2	QA	R
ADDED QUOTE COMMENT AND LEGEND	B	10/22/10	GES			
INITIAL RELEASE	A	09/16/10	CJM			