REV	DESCRIPTION	DATE
1	RDK-97127	張馨尹 2009/05/06
2	RDK-98020	張馨尹 2009/05/06

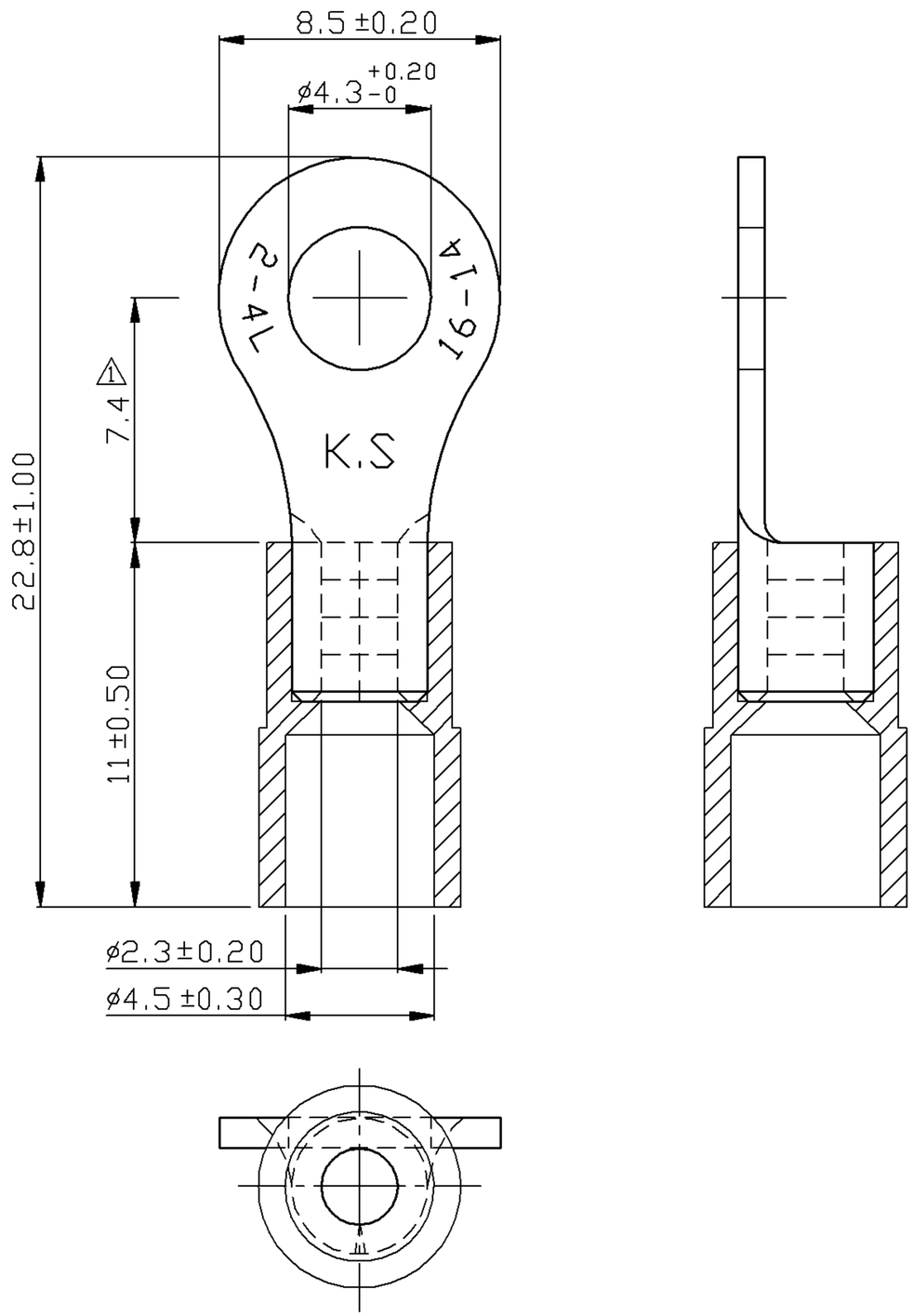

NOTE :

1. MAXIMUM ELECTRIC CURRENT :

A.W.G.	16	14		
AMP.	18	30		

2. MAXIMUM ELECTRICAL RATING : 105°C 600 VOLTS MAX.
3. INSULATION MATERIAL : NYLON
4. INSULATION COLOR : BLUE
5. TERMINAL MATERIAL : COPPER
6. WIRE RANGE : 16-14 A.W.G. (1.5-2.5 mm^2)
7. TERMINAL SURFACE TREATMENT : TIN PLATED
8. TERMINAL THICKNESS : 0.8 mm

2 Tolerance Unless Otherwise Specified	
0 > mm ±	ANGLE
> mm ±	0°> ° REF ±
> mm ±	°> ° ±
> mm ±	°> ° ±

NAME	NYLON-INSULATED RING TERMINALS				UNIT	mm
PART NO.	RNYL2-4	MATERIAL	------		APPROVE	楊敦孝
NUMBER	KA-951048-C	SCALE	SHEET	PAGE	CHECKED	
DATE	2006/08/08	4/1	1-2	1OF2	DRAWN	張馨尹

KST® K.S. TERMINALS INC.