REV	DATE	describe
G	2014.09.25	Plug increase the UL MARK

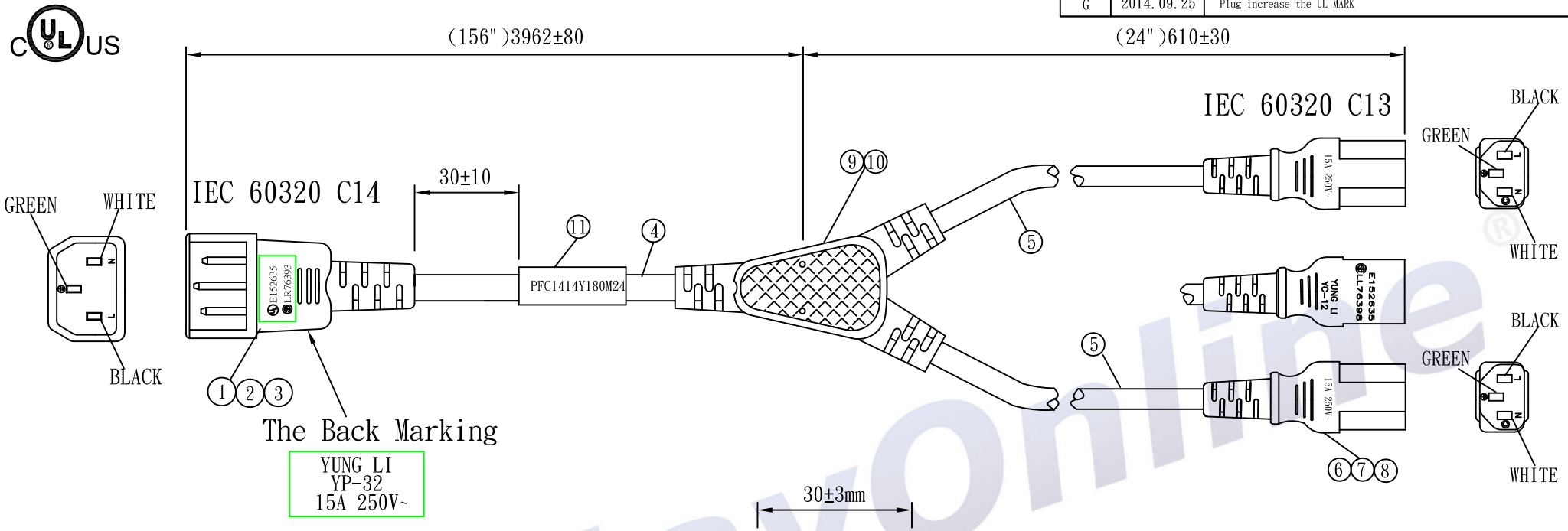

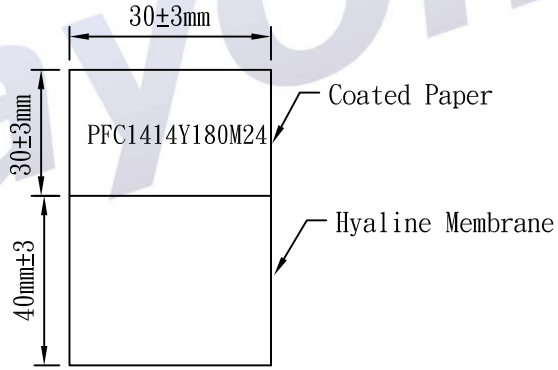

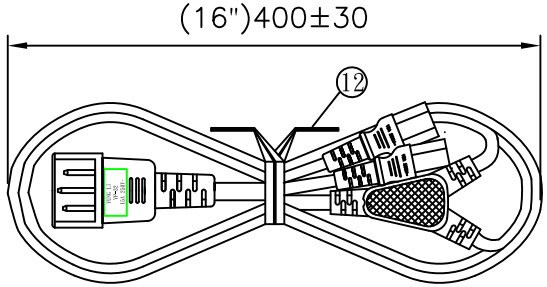

NO.	SPECIFICATION	Q'TY	REMARK
1	YP-32 PVC PLASTIC:50P BLACK	15g/PC	
2	YP-32 INNER BODY:2 X 4 BLACK	1PC	
3	TER:98672	3PCS	
4	SJT 14/3C 105°C BLACK	1PC	
5	SJT 14/3C 105°C BLACK	2PCS	
6	YC-12 PVC PLASTIC:50P BLACK	18g/PC	
7	TER:97740BS-0	6PCS	
8	YC-12 INNER BODY	2PCS	
9	SR-6 PVC PLASTIC:50P BLACK	8g/PC	
10	TER:99146	3PCS	
11	LABEL: (40+30)*30mm	1PC	
12	MINI TIE:L=180mm BLACK	1PC	

Tolerance >0±0.30 >1.0±0.50 >10.0±1.0 >20.0±2.0 Angle: ±1°	Approved		Date		StayOnline®			
	Checked		Date					
	Drawn		Date		Customer			
	Cat.No.				P/N.			
	Drawing No.	5547	Rev.		Material	P.V.C	Unit	mm
					Scale			