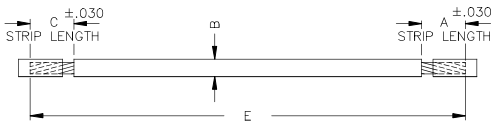

* – NOT COILED.

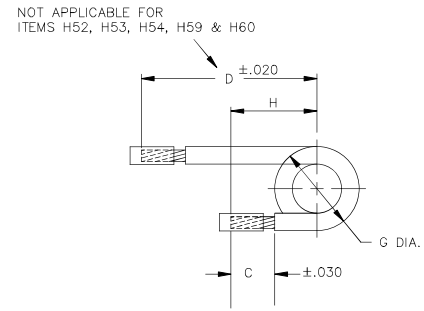

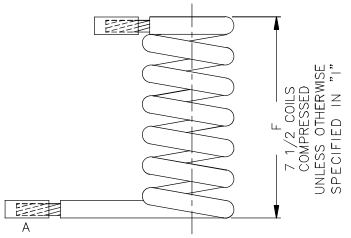

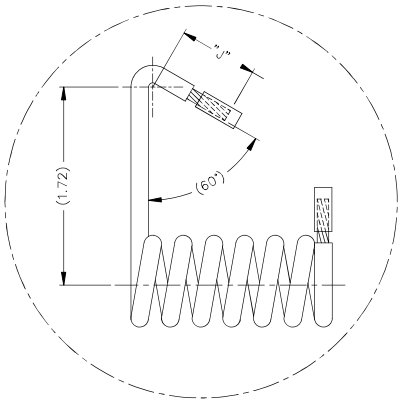

ALTERNATE CONSTRUCTION
FOR ITEMS H52, H53 & H54

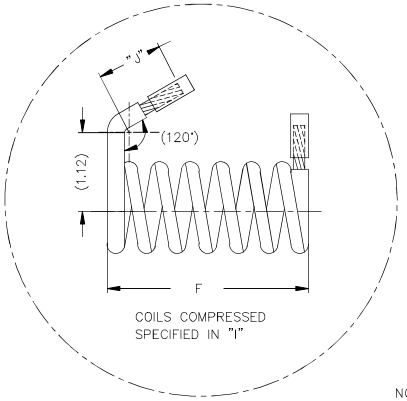

COIL DIRECTION
ALTERNATE CONSTRUCTION
FOR ITEMS H59 & H60

NOTE:
1 – INSPECTION REQUIRED FOR DIM "A" AND "J" ON ITEMS H52, H53, H54, H59 & H60.

UNLESS OTHERWISE SPECIFIED DIMENSIONS IN INCHES X.X ±0.1 X.XX ±0.02 X.XXX ±0.005 X° ±1 X.X° ±.5	DRAFTER/DESIGNER: A. NUNEZ	DATE (YYYY/MM/DD): 2023/12/14
	ENGINEERING APPROVED: L. RENTERIA	MANUFACTURING: M. GONZALEZ
	REVISION DESCRIPTION	ECO #: CO-0274938
DRAWING IN ACCORDANCE WITH ASME Y14.5M-1994	– IN LOCATION D1, H59 & H60 ADDED TO NOT APPLICABLE ITEMS NOTE. – IN LOCATION B3, NEW VIEW ADDED FOR COIL DIRECTION & ALTERNATE CONSTRUCTION FOR H59 & H60. – IN LOCATION A2, INSPECTION REQUIRED NOTE ADDED.	
X.XXXX SYMBOLS PER 46P-1143		
ENG/INFO REFERENCE PRODUCT CODE: 3704		

EATON CORPORATION - CONFIDENTIAL AND PROPRIETARY
NOTICE TO PERSONS RECEIVING THIS DOCUMENT AND/OR TECHNICAL INFORMATION
THIS DOCUMENT INCLUDES THE DRAWING AND INFORMATION CONTAINED THEREON IS CONFIDENTIAL AND IS THE EXCLUSIVE PROPERTY OF EATON CORPORATION, AND IS MERELY ON LOAN AND SUBJECT TO RECALL BY EATON AT ANY TIME. BY TAKING POSSESSION OF THIS DOCUMENT, THE RECIPIENT ACKNOWLEDGES AND AGREES THAT THIS DOCUMENT CANNOT BE USED IN ANY MANNER ADVERSE TO THE INTERESTS OF EATON AND THAT NO PORTION OF THIS DOCUMENT MAY BE COPIED OR OTHERWISE REPRODUCED WITHOUT THE PRIOR WRITTEN CONSENT OF EATON. IN THE CASE OF CONFLICTING CONTRACTUAL PROVISIONS, THIS NOTICE SHALL GOVERN THE STATUS OF THIS DOCUMENT.
© 2014 Eaton Corporation. All Rights Reserved

TITLE: QUICKLAG CIRCUIT BREAKER
DETAIL FOR GROUND FAULT
NEUTRAL LEADS

SIZE	DRAWING NUMBER	REVISION
C	5655B03	050

CHANGE RESPONSIBILITY: RWDD MCB ENGINEERING

CLASS CODE	SCALE	SHEET
NA	NTS	1 OF 2

DSD_CFM_ACAD_IN.DWG REV 2