GeneralCable
THREE CONDUCTOR FLEX CABLE

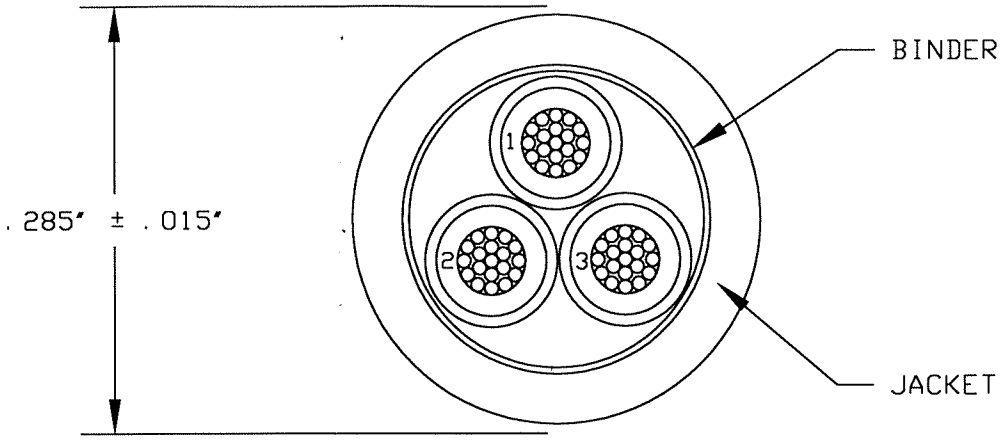

COMPONENT I- (ITEMS 1-3)	CONDUCTOR:	#18AWG 19/.0092 BARE COPPER
	INSULATION:	PVC-.015" NOMINAL WALL
	JACKET:	NYLON (CLEAR)-.005" NOMINAL WALL
	DIAMETER:	.088" NOMINAL
CABLE-	CORE:	THREE (3) COMPONENT I (ITEMS 1-3) CABLED TOGETHER WITH A L.H. LAY
BINDER-	.001" MYLAR TAPE-10% MIN. OVERLAP	
JACKET-	NEOPRENE (BLACK)-.045" NOMINAL WALL	
DIAMETER-	.285" NOMINAL	
NET CABLE WGT-	77 LBS/1000'	
JACKET PRINT-	"GENERAL CABLE(R) BRAND-REX BRAND (WC) NVN 90C FLEXIBLE CONTROL CABLE 600V TYPE TC SUN RES 3/C 18AWG TFFN (UL) DAY/MONTH/YEAR"	

COLOR CODE-

ITEM NUMBER	COLOR	PRINT
1	BLACK	1 ONE
2	WHITE	2 TWO
3	RED	3 THREE

REVISIONS

0	06/25/04	FIRST ISSUE
A	11/28/05	DRAWING NUMBER

REFERENCES

IEWC

GCC PART 352390 T-8715 (3/18)-E1-NVN

GENERAL CABLE
1600 West Main Street, Willimantic, CT 06226-1128
The Power of One

DRAWING NO: 12-1586

DRAWN BY: W. DRABEK | APPROVED BY: M. LAJEUNESSE

THIS DRAWING IS THE PROPERTY OF GENERAL CABLE AND SHALL NOT BE REPRODUCED, COPIED, OR USED AS BASIS FOR THE MANUFACTURE OR SALE OF THIS DESIGN WITHOUT THE PERMISSION OF GENERAL CABLE