MEDIUM
065408

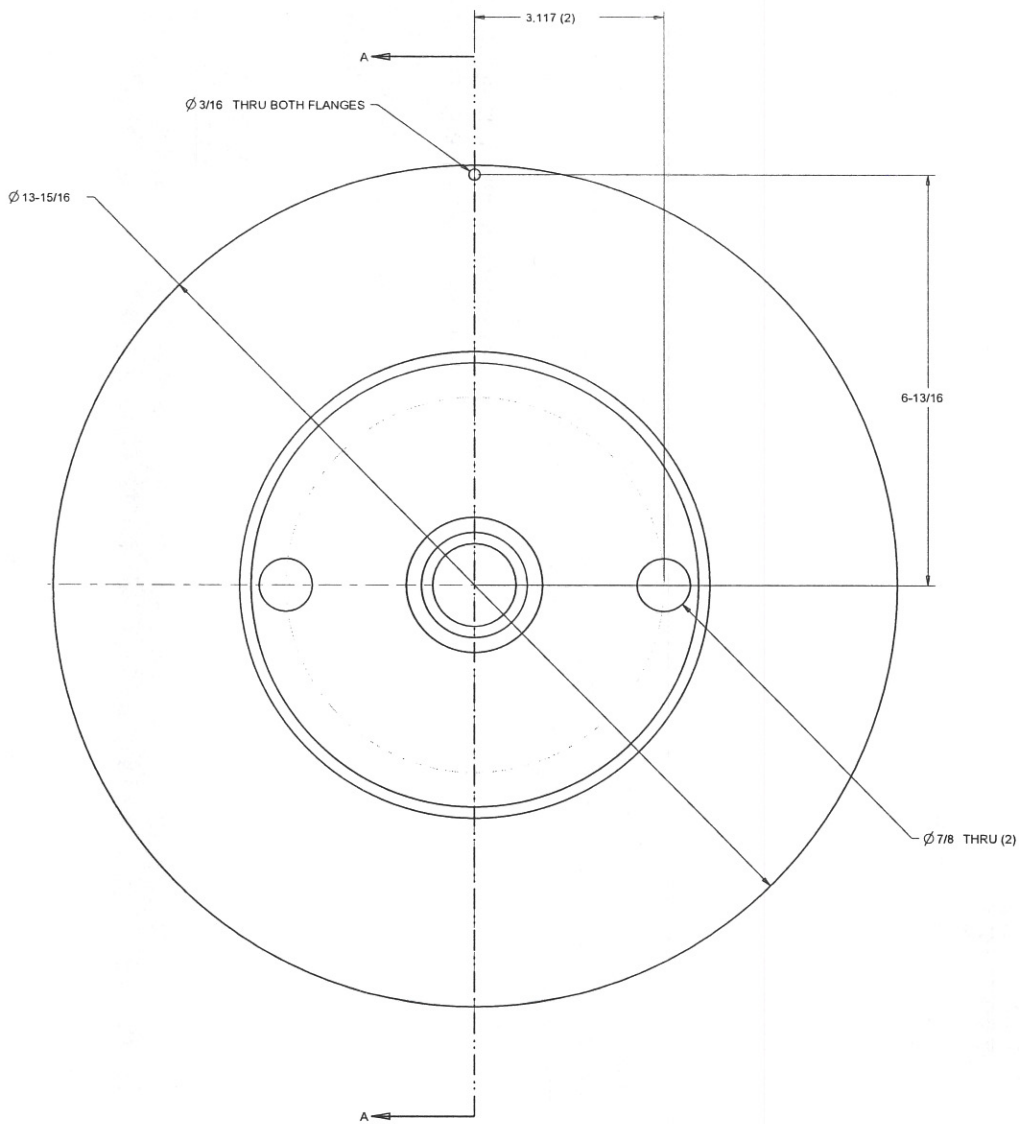

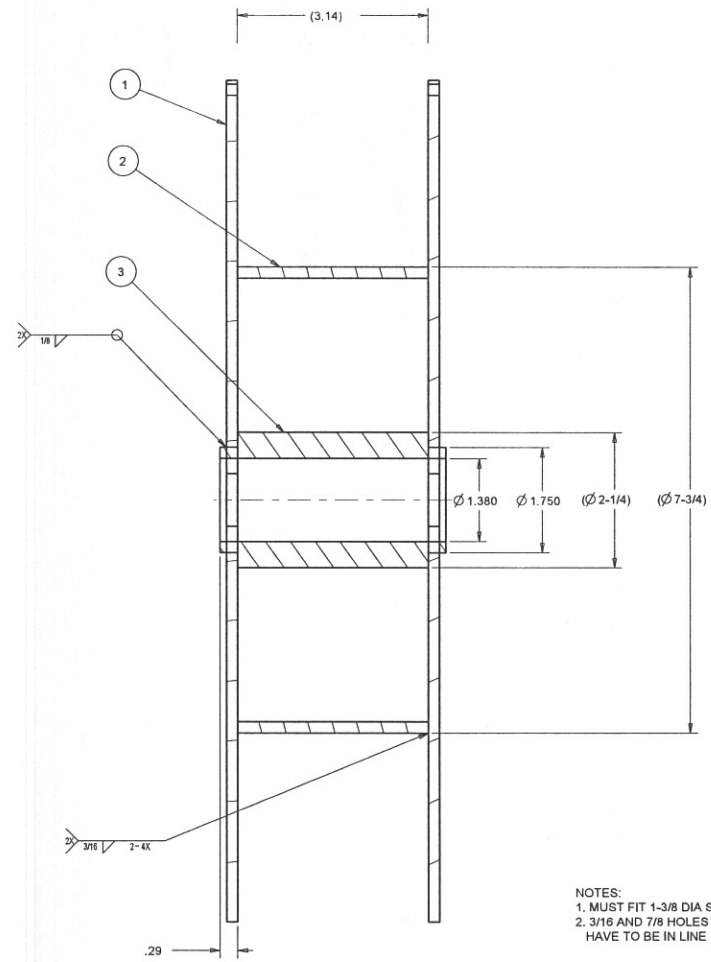

SECTION A-A

NOTES:
1. MUST FIT 1-3/8 DIA SHAFT
2. 3/16 AND 7/8 HOLES DO NOT HAVE TO BE IN LINE

3	2-1/4 OD X 7/16 WALL X 3-3/4 HRS	1
2	7-3/4 OD X 1/4 WALL X 3.14 HRS	1
1	13-15/16 DIA X 7 GA HRS	2

27-MAR-12	A TAM	NEW		

	1 - 1	NOTED	SPOOL	MEDIUM
		TAM	26-MAR-12	